RAK3172 WisDuo LoRaWAN Module Datasheet

Overview

Description

The RAK3172 is a low-power, long-range transceiver module based on the STM32WLE5CC (RAK3172 and RAK3172-T) or STM32WLE5JCI6 (RAK3172-F) chip. It offers an easy-to-use, compact, and low-power solution for long-range wireless data applications. This module complies with Class A, B, and C of the LoRaWAN 1.0.3 specifications. It can effortlessly connect to various LoRaWAN server platforms, including TheThingsNetwork (TTN), Chirpstack, Actility, etc. Additionally, it supports LoRa Point-to-Point (P2P) communication mode, enabling the rapid implementation of customized long-range LoRa networks.

You can configure the module's mode and operation using AT commands via a UART interface. RAK3172 also offers low-power features, making it well-suited for battery-powered applications.

> **INFO**
>
> There are three versions of the RAK3172 available:
> RAK3172 - Base model, using STM32WLE5 with an oscillator, suitable for standard temperature range
> RAK3172-T - Extended temperature module, using STM32WLE5 with a temperature controlled oscillator
> RAK3172-F - Provides an additional 512 kB external flash and uses the STM32WLE5 with a temperature-controlled oscillator

Features

- Based on **STM32WLE5CC** (RAK3172 and RAK3172-T) or **STM32WLE5JCI6** (RAK3172-F)
- **LoRaWAN 1.0.3** specification compliant
- **Supported bands**: EU433, CN470, IN865, EU868, AU915, US915, KR920, RU864, and AS923-1/2/3/4
- LoRaWAN activation via OTAA/ABP
- LoRa Point-to-Point (P2P) communication
- Custom firmware using Arduino via RUI3 API
- Easy to use AT command set via UART interface
- Long-range - greater than 15 km with optimized antenna
- ARM Cortex-M4 32-bit
- 256 kbytes flash memory with ECC
- 64 kbytes RAM
- 512 kbytes external flash memory (***only RAK3172-F***)
- Ultra-Low Power Consumption of 1.69 µA in sleep mode (RAK3172 and RAK3172-T)
- Ultra-Low Power Consumption of 2.2 µA in sleep mode (RAK3172-F)
- **Supply Voltage RAK3172 and RAK3172-T**: 2.0 V ~ 3.6 V
- **Supply Voltage RAK3172-F**: 2.3 V ~ 3.6 V
- **Temperature Range**:
  - **RAK3172**: -20° C ~ 85° C
  - **RAK3172-T**: -40° C ~ 85° C
  - **RAK3172-F**: -40° C ~ 85° C

> **NOTE**
>
> There are two certification variants available for the RAK3172 Module: (1) with the CE & UKCA Certification Mark and (2) with FCC, IC, & RCM Certification Mark.
>
> If you need a LoRa module with BLE 5.0 capability, you can check out the RAK11720. The RAK11720 is pin-to-pin compatible with the RAK3172 and has additional pins for ground and a BLE RF antenna port.

> **WARNING**
>
> Temperature ratings:
> **RAK3172** is -20° C to 85° C
> **RAK3172-T** is -40° C to 85° C
> **RAK3172-F** is -40° C to 85° C

Specifications

This section covers the hardware and software specifications of the RAK3172. Also, it includes the block diagram and an updated firmware link for the RAK3172 WisDuo Module.

Overview

Block Diagram

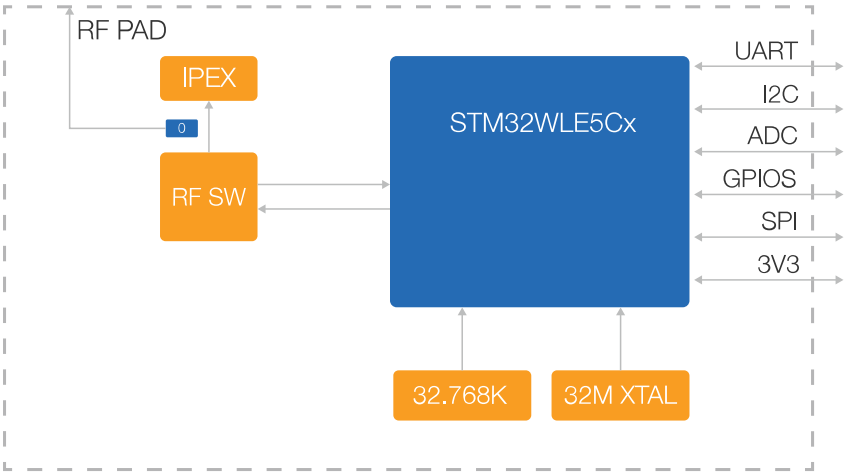

Figure 1: RAK3172 System Block Diagram

Hardware

The hardware specification discusses the interfaces, pinouts, and their corresponding functions and diagrams. It also covers the parameters of both RAK3172 modules in terms of RF, electrical, mechanical, and operating characteristics.

Interfaces

Module	Interfaces
RAK3172	UART2/LPUART1, UART1

Sub-GHz SPI interface

A dedicated internal SPI interface called **SUBGHZSPI** is used to communicate with the RF subsystem of the **STM32WLE5CCU6**.

Pin Definitions RAK3172, RAK3172-T and RAK3172-F

The RAK3172, RAK3172-T and RAK3172-F are sharing the same module size and pin out. The difference is that the RAK3172-F is exposing more GPIO pins.

> **WARNING**
>
> When using `RF` pin for antenna and not the IPEX connector variant, there are design considerations to make sure optimum RF performance.

- RF traces must be away from interference (switching nodes of DC-DC supplies, high current/voltage pulses from controllers of inductive loads like motors, signal generators, etc.).
- RF traces must have 50 Ohm impedance. It is advisable to use impedance simulation software tools to achieve this requirement.
- If using an external antenna connector, place it close to the `RF` pin.
- Ground plane optimization is critical for certain antenna types, such as monopoles.
- GND traces used for RF path return must be directly connected to the GND plane and not treated as thermal reliefs.
- It is recommended that RF traces be routed in a curve rather than at a sharp 90 degrees.

In addition, with a commitment to making IoT easy, RAK offers a dedicated service for Antenna RF Design which includes PCB design, tuning, matching, and RF testing.

Pin Definition RAK3172 and RAK3172-T

RAK3172 and RAK3172-T

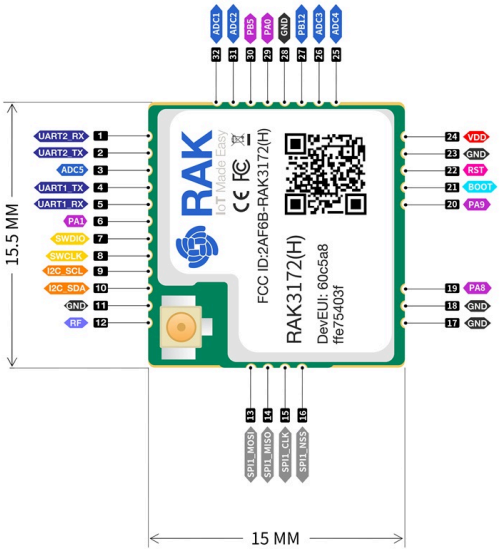

Figure 2: Board Pinout for RAK3172 and RAK3172-T

Pin No.	Name	Type	Description
1	PA3/UART2_RX	I	Reserved - UART2/LPUART1 Interface (AT Commands and FW Update)
2	PA2/UART2_TX	O	Reserved - UART2/LPUART1 Interface (AT Commands and FW Update)
3	PA15/PIN_A4	I/O	GPIO and ADC
4	PB6/UART1_TX	O	UART1 Interface
5	PB7/UART1_RX	I	UART1 Interface
6	PA1	I/O	GPIO only
7	PA13/SWDIO		Reserved - SWD debug pin (SWDIO)

Pin No.	Name	Type	Description
8	PA14/SWCLK		Reserved - SWD debug pin (SWCLK)
9	PA12/I2C_SCL	I/O	GPIO and I2C (SCL)
10	PA11/I2C_SDA	I/O	GPIO and I2C (SDA)
11	GND		Ground connections
12	RF		RF Port (only available on **RAK3172 No-IPEX connector variant**)
13	PA7/SPI1_MOSI	I/O	GPIO and SPI (MOSI)
14	PA6/SPI1_MISO	I/O	GPIO and SPI (MISO)
15	PA5/SPI1_CLK	I/O	GPIO and SPI (CLK)
16	PA4/SPI1_NSS	I/O	GPIO and SPI (NSS)
17	GND		Ground connections
18	GND		Ground connections
19	PA8	I/O	GPIO only
20	PA9	I/O	GPIO only
21	BOOT0		Boot0 mode enable pin - high active
22	RST		MCU Reset (NRST)
23	GND		Ground connections
24	VDD		VDD - Voltage Supply
25	PA10/PIN_A3	I/O	GPIO and ADC
26	PB2/PIN_A2	I/O	GPIO and ADC
27	PB12	I/O	10 kΩ internally **pulled-up for high freq** variant or **pulled-down for low freq** variant
28	GND		Ground connections
29	PA0	I/O	GPIO only
30	PB5	I/O	GPIO only
31	PB4/PIN_A1	I/O	GPIO and ADC
32	PB3/PIN_A0	I/O	GPIO and ADC

Pin Definition RAK3172-F

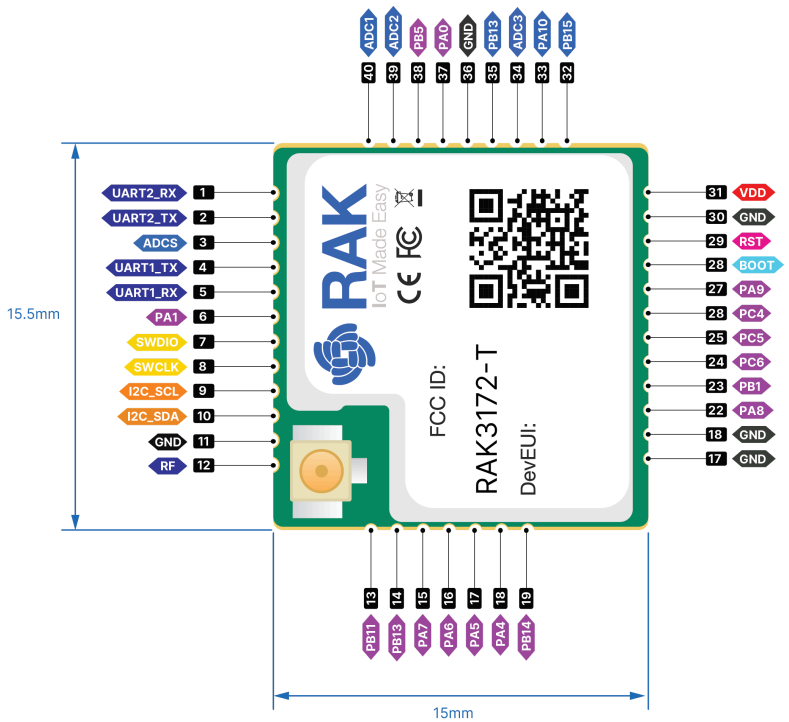

Figure 3: Board Pinout for RAK3172-F

RAK3172-F

Pin No.	Name	Type	Description
1	PA3/UART2_RX	I	Reserved - UART2/LPUART1 Interface (AT Commands and FW Update)
2	PA2/UART2_TX	O	Reserved - UART2/LPUART1 Interface (AT Commands and FW Update)
3	PA15/PIN_A4	I/O	GPIO and ADC
4	PB6/UART1_TX	O	UART1 Interface
5	PB7/UART1_RX	I	UART1 Interface
6	PA1	I/O	GPIO only
7	PA13/SWDIO		Reserved - SWD debug pin (SWDIO)
8	PA14/SWCLK		Reserved - SWD debug pin (SWCLK)
9	PA12/I2C_SCL	I/O	GPIO and I2C (SCL)
10	PA11/I2C_SDA	I/O	GPIO and I2C (SDA)
11	GND		Ground connections
12	RF		RF Port (only available on **RAK3172 No-IPEX connector variant**)
13	PB11	I/O	GPIO only
14	PB13	I/O	GPIO only
15	PA7/SPI1_MOSI	I/O	GPIO and SPI (MOSI)

Pin No.	Name	Type	Description
16	PA6/SPI1_MISO	I/O	GPIO and SPI (MISO)
17	PA5/SPI1_CLK	I/O	GPIO and SPI (CLK)
18	PA4/SPI1_NSS	I/O	GPIO and SPI (NSS)
19	PB14	IO	GPIO only
20	GND		Ground connections
21	GND		Ground connections
22	PA8	I/O	GPIO only
23	PB1	I/O	GPIO only
24	PC6	I/O	GPIO only
25	PC5	I/O	GPIO only
26	PC4	I/O	GPIO only
27	PA9	I/O	GPIO only
28	BOOT0		Boot0 mode enable pin - high active
29	RST		MCU Reset (NRST)
30	GND		Ground connections
31	VDD		VDD - Voltage Supply
32	PB15	I/O	GPIO only
33	PA10/PIN_A3	I/O	GPIO and ADC
34	PB2/PIN_A2	I/O	GPIO and ADC
35	PB12	I/O	10 kΩ internally **pulled-up for high freq** variant or **pulled-down for low freq** variant
36	GND		Ground connections
37	PA0	I/O	GPIO only
38	PB5	I/O	GPIO only
39	PB4/PIN_A1	I/O	GPIO and ADC
40	PB3/PIN_A0	I/O	GPIO and ADC

RF Characteristics

The RAK3172 supports two different frequency variations: RAK3172(L) Low Radio Frequency and RAK3172(H) High Radio Frequency.

> **NOTE**
>
> Performance test and evaluation of RAK3172-T (with TCXO), can be found on the RAK3172-T TCXO Verification Report

Operating Frequencies

Module	Region	Frequency
RAK3172(L)	Europe	EU433
	China	CN470
RAK3172(H)	Europe	EU868
	North America	US915
	Australia	AU915
	Korea	KR920
	Asia	AS923-1/2/3/4
	India	IN865
	Russia	RU864

Electrical Characteristics

Operating Voltage

RAK3172 and RAK3172-T

Feature	Minimum	Typical	Maximum	Unit
VCC	2.0	3.3	3.6	Volts (V)

RAK3172-F

Feature	Minimum	Typical	Maximum	Unit
VCC	2.3	3.3	3.6	Volts (V)

Operating Current

Feature	Condition	Minimum	Typical	Maximum	Unit
Operating Current	TX Mode	87 (@ 20 dBm 868 Mhz)			mA
	RX Mode	5.22			mA

Sleep Current

RAK3172 and RAK3172-T

Feature	Condition	Minimum (2.1 V)	Typical (3.3 V)	Maximum	Unit
Current Consumption	EU868	-	1.69	-	µA
	US915	-	1.69	-	µA

Feature	Condition	Minimum (2.1 V)	Typical (3.3 V)	Maximum	Unit
	CN470	-	1.69	-	µA

RAK3172-F

Feature	Condition	Minimum (2.1 V)	Typical (3.3 V)	Maximum	Unit
Current Consumption	EU868	-	2.2	-	µA
	US915	-	2.2	-	µA
	CN470	-	2.2	-	µA

NOTE

For the reference application schematic of RAK3172 with minimum components requirements, refer to the RAK3272S Breakout Board Datasheet.

Mechanical Characteristics

Module Dimensions

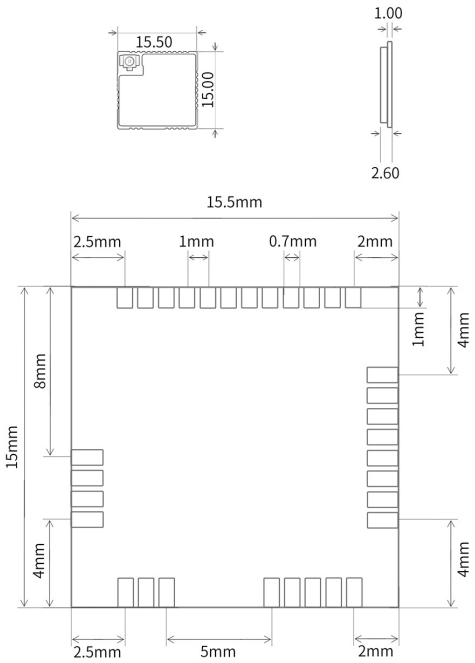

Figure 4: RAK3172 and RAK3172-T Physical Dimension

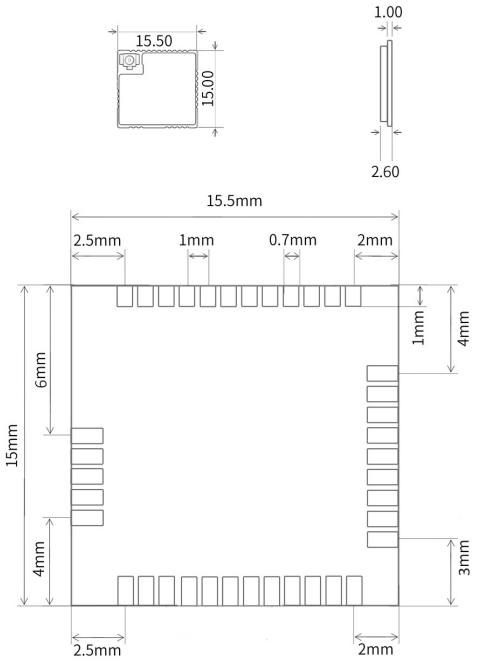

Figure 5: RAK3172-F Physical Dimension

Layout Recommendation

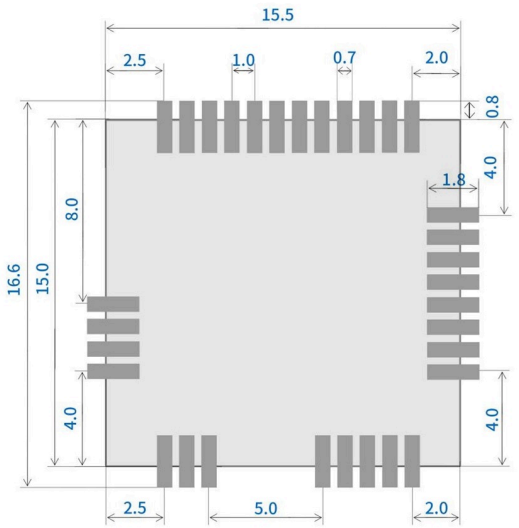

Figure 6: RAK3172 and RAK3172-T Layout

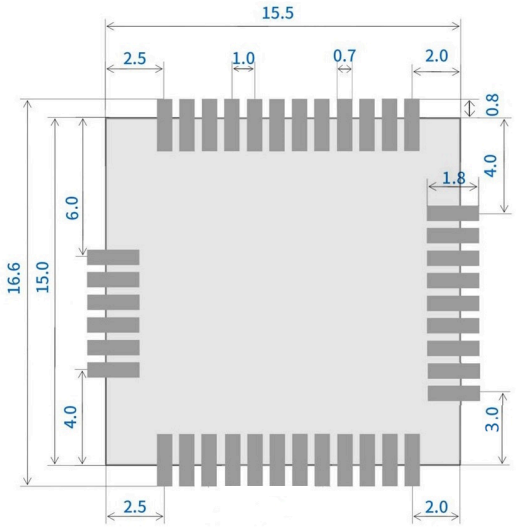

Figure 7: RAK3172-F Layout

Environmental Characteristics

Operating Temperature

Module	Minimum	Typical	Maximum	Unit
RAK3172	-20	25	85	° C
RAK3172-T	-40	25	85	° C
RAK3172-F	-40	25	85	° C

Storage Temperature

Feature	Minimum	Typical	Maximum	Unit
Storage Temperature	-40		85	° C

Recommended Reflow Profile

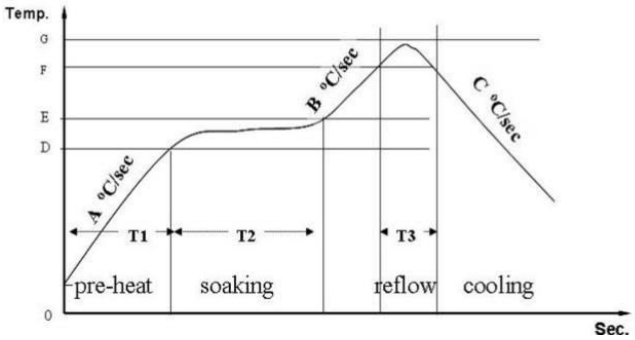

Figure 8: Reflow Profile for RAK3172

Standard conditions for reflow soldering:

- Pre-heating Ramp (A) (Initial temperature: 150° C): **1~2.5° C/sec**
- Soaking Time (T2) (150~180° C): **60~100 sec**
- Peak Temperature (G): **230~250° C**
- Reflow Time (T3) (> 220° C): **30~60 sec**
- Ramp-up Rate (B): **0~2.5° C/sec**
- Ramp-down Rate (C): **1~3° C/sec**

Software

Download the latest RAK3172 WisDuo LoRaWAN Module firmware provided below. The RAK3172(L) and RAK3172(H) use the same firmware, and it will automatically detect the variant of the module being used.

The **bin file** contains only the application code. You will need the RAK DFU Tool to upload this file to the module.

The **hex file** contains both the bootloader and the application code. You need to use STM32CubeProgrammer to upload this.

> **WARNING**
> Uploading the `.hex` file via STM32CubeProgrammer will erase all configured data on the device.

RAK3172 uses UART2 serial pins to upload the latest firmware.

> **NOTE**
> RAK3172 should automatically go to BOOT mode when the firmware is uploaded via RAK DFU Tool or WisToolBox.
>
> If BOOT mode is not initiated, you can manually send `AT+BOOT` command to start bootloader mode.

Firmware

> **WARNING**
> Make sure to flash the correct firmware!
> For RAK3172 use firmware ***RAK3172-E_latest***. This version will not work with RAK3172-T or RAK3172-F
> For RAK3172-T use firmware ***RAK3172-T_latest***. This version will not work with the RAK3172 or the RAK3172-F
> For RAK3172-F use firmware ***RAK3172-F_latest***. This version will not work with the RAK3172 or the RAK3172-T

Model	Version	Source
RAK3172 (.bin)	RUI3 Application Code only (default baudrate = 115200)	Download
RAK3172 (.hex)	RUI3 Bootloader and Application Code(default baudrate = 115200)	Download
RAK3172-T (.bin)	RUI3 Application Code only(default baudrate = 115200)	Download
RAK3172-T (.hex)	RUI3 Bootloader and Application Code (default baudrate = 115200)	Download
RAK3172-F (.bin)	RUI3 Application Code only(default baudrate = 115200)	Download
RAK3172-F (.hex)	RUI3 Bootloader and Application Code (default baudrate = 115200)	Download
RAK3172 (OLD)	**DEPRECATED** V1.0.4 (default baudrate = 9600)	Download

> **WARNING**
> There are RAK3172 devices loaded with old firmware versions which are not based on RUI3 (RAKwireless Unified Interface V3). These devices have v1.0.4 and below.

If the host microcontroller code is based on this old firmware, refer to the RAK3172 AT Command migration guide that explains in detail the few differences between the two AT commands set.

Models and Bundles

Ordering Information

P/N	Model	TCXO	Antenna Interface	Frequency	SKU
RAK3172-8-SM-NI	RAK3172	Without TCXO	No IPEX	8XX MHz for RU864/IN865/EU868	305044
RAK3172-9-SM-NI	RAK3172	Without TCXO	No IPEX	9XX MHz for US915/AU915/KR920/AS923	306041
RAK3172-9-SM-NI	RAK3172	Without TCXO	No IPEX	AS923-1 Japan	309044
RAK3172-43-SM-NI	RAK3172	Without TCXO	No IPEX	EU433	301026
RAK3172-47-SM-NI	RAK3172	Without TCXO	No IPEX	CN470	302033
RAK3172-T-8-SM-NI	RAK3172-T	With ±2.5 ppm TCXO	No IPEX	8XX MHz for RU864/IN865/EU868	305054
RAK3172-T-9-SM-NI	RAK3172-T	With ±2.5 ppm TCXO	No IPEX	9XX MHz for US915/AU915/KR920/AS923	306051
RAK3172-T-9-SM-NI	RAK3172-T	With ±2.5 ppm TCXO	No IPEX	AS923-1 Japan	309054
RAK3172-T-43-SM-NI	RAK3172-T	With ±2.5 ppm TCXO	No IPEX	EU433	301029
RAK3172-T-47-SM-NI	RAK3172-T	With ±2.5 ppm TCXO	No IPEX	CN470	302037
RAK3172-TE-8-SM-NI	RAK3172-TE	With ±0.5 ppm TCXO	No IPEX	8XX MHz for RU864/IN865/EU868	305058
RAK3172-TE-9-SM-NI	RAK3172-TE	With ±0.5 ppm TCXO	No IPEX	9XX MHz for US915/AU915/KR920/AS923	306055
RAK3172-TE-9-SM-NI	RAK3172-TE	With ±0.5 ppm TCXO	No IPEX	AS923-1 Japan	309057
RAK3172-TE-43-SM-NI	RAK3172-TE	With ±0.5 ppm TCXO	No IPEX	EU433	-
RAK3172-TE-47-SM-NI	RAK3172-TE	With ±0.5 ppm TCXO	No IPEX	CN470	-
RAK3172-F-8-SM-NI	RAK3172-F	With ±2.5 ppm TCXO	No IPEX	8XX MHz for RU864/IN865/EU868	-
RAK3172-F-9-SM-NI	RAK3172-F	With ±2.5 ppm TCXO	No IPEX	9XX MHz for US915/AU915/KR920/AS923	-
RAK3172-F-9-SM-NI	RAK3172-F	With ±2.5 ppm TCXO	No IPEX	AS923-1 Japan	-
RAK3172-F-43-SM-NI	RAK3172-F	With ±2.5 ppm TCXO	No IPEX	EU433	-
RAK3172-F-47-SM-NI	RAK3172-F	With ±2.5 ppm TCXO	No IPEX	CN470	-
RAK3172-8-SM-I	RAK3172	Without TCXO	With IPEX	8XX MHz for RU864/IN865/EU868	305045
RAK3172-9-SM-I	RAK3172	Without TCXO	With IPEX	9XX MHz for US915/AU915/KR920/AS923	306042
RAK3172-9-SM-I	RAK3172	Without TCXO	With IPEX	AS923-1 Japan	309045
RAK3172-43-SM-I	RAK3172	Without TCXO	With IPEX	EU433	301025

P/N	Model	TCXO	Antenna Interface	Frequency	SKU
RAK3172-47-SM-I	RAK3172	Without TCXO	With IPEX	CN470	302032
RAK3172-T-8-SM-I	RAK3172-T	With ±2.5 ppm TCXO	With IPEX	8XX MHz for RU864/IN865/EU868	305055
RAK3172-T-9-SM-I	RAK3172-T	With ±2.5 ppm TCXO	With IPEX	9XX MHz for US915/AU915/KR920/AS923	306052
RAK3172-T-9-SM-I	RAK3172-T	With ±2.5 ppm TCXO	With IPEX	AS923-1 Japan	309055
RAK3172-T-43-SM-I	RAK3172-T	With ±2.5 ppm TCXO	With IPEX	EU433	301030
RAK3172-T-47-SM-I	RAK3172-T	With ±2.5 ppm TCXO	With IPEX	CN470	302038
RAK3172-TE-8-SM-I	RAK3172-TE	With ±0.5 ppm TCXO	With IPEX	8XX MHz for RU864/IN865/EU868	305057
RAK3172-TE-9-SM-I	RAK3172-TE	With ±0.5 ppm TCXO	With IPEX	9XX MHz for US915/AU915/KR920/AS923	306054
RAK3172-TE-9-SM-I	RAK3172-TE	With ±0.5 ppm TCXO	With IPEX	AS923-1 Japan	309056
RAK3172-TE-43-SM-I	RAK3172-TE	With ±0.5 ppm TCXO	With IPEX	EU433	-
RAK3172-TE-47-SM-I	RAK3172-TE	With ±0.5 ppm TCXO	With IPEX	CN470	-
RAK3172-F-8-SM-I	RAK3172-F	With ±2.5 ppm TCXO	With IPEX	8XX MHz for RU864/IN865/EU868	-
RAK3172-F-9-SM-I	RAK3172-F	With ±2.5 ppm TCXO	With IPEX	9XX MHz for US915/AU915/KR920/AS923	-
RAK3172-F-9-SM-I	RAK3172-F	With ±2.5 ppm TCXO	With IPEX	AS923-1 Japan	-
RAK3172-F-43-SM-I	RAK3172-F	With ±2.5 ppm TCXO	With IPEX	EU433	-
RAK3172-F-47-SM-I	RAK3172-F	With ±2.5 ppm TCXO	With IPEX	CN470	-

Certification

NOTE

For CE and FCC certifications we provide an AT command guide.
You can find it in our RUI3 documentation or get it from our Download Center .

Shenzhen RAKwireless Technology Co., Ltd.
Room 506, Bldg B, New Compark, Pingshan First Road, Taoyuan Street, Nanshan District, Shenzhen, Guandong Province, The People's Republic of China

www.RAKwireless.com
+86-755-86108311
inquiry@RAKwireless.com